ZBD6920DSS/ZBD6900DII
GE Monogram® Fully Integrated Built-In Dishwashers

Dimensions and Specifications (in inches)

- The dishwasher must be installed so that the drain hose is no more than 10 feet in length for proper drainage.
- Water and power supply should enter in the shaded area.
- Electrical and water connections are at the right front of the dishwasher. The hot water line should extend forward 30" to 40" from the rear wall. The electrical must extend forward at least 24" to reach the junction box.
- To prevent siphoning, an air gap must be used when the waste tee or disposer connection is less than 18" above the floor.

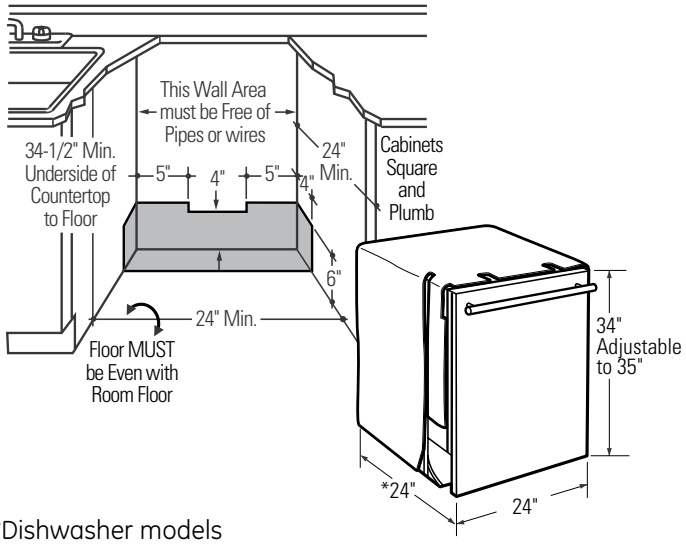

*Dishwasher models ZBD6900 and ZBD8900 require a 3/4" thick custom panel and will be 24-3/4" deep.

Electrical Requirements

The dishwasher must be supplied with 120V, 60Hz, and connected to an individual properly grounded branch circuit protected by a 15- or 20-amp circuit breaker or time-delay fuse.

Custom Panel for Model ZBD6900DII

These dishwashers require a field installed 3/4" thick custom panel and custom handle. An installation template is packed with these models and may be obtained in advance. **Order Pub. No. 31-30569-1**. Complete panel installation instructions are included on the template.

CUSTOM PANEL SIZE REQUIREMENTS

HEIGHT

Panel height must be between 30-1/16" and 30-1/4".

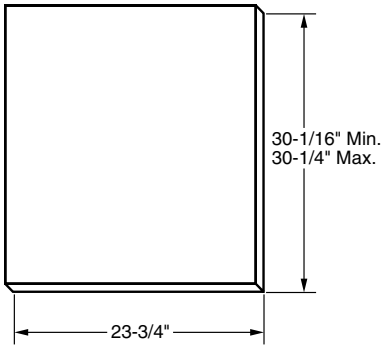

- If the panel height is more than 30-1/4" it will prevent the door from swinging open.
- If the panel height is less than 30-1/16" it will not cover the dishwasher door frame.
- The top of the custom panel must be flush with the top of the door. The 1/2" minimum gap between the top of the door and the bottom of the countertop must be maintained.

WIDTH

Panel width must be 23-3/4".

- If the panel width is less than 23-3/4" it will not cover the dishwasher frame.

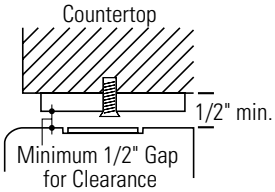

IMPORTANT: To ensure optimum door balance performance, the custom panel must not weigh more than 14 lbs.

Accessories for custom panel model ZBD6900

ZPR0700S door panel provides a professional-style handle on a stainless steel door panel.

ZTB700 stainless steel tubular handle for installation onto a custom panel.

Before installing refer to installation instructions for details. Pub. No. 31-30586

For answers to your Monogram,® GE Profile™ or GE® appliance questions, visit our website at geappliances.com or call GE Answer Center® service, 800.626.2000.

imagination at work

As an ENERGY STAR® partner, GE has determined that this product meets the ENERGY STAR guidelines for energy efficiency.

Listed by Underwriters Laboratories

ZBD6900DII
GE Monogram® Fully Integrated Built-In Dishwashers

CUSTOM DISHWASHER DOOR PANEL TEMPLATE

GE PUB. NO. 31-30569-1

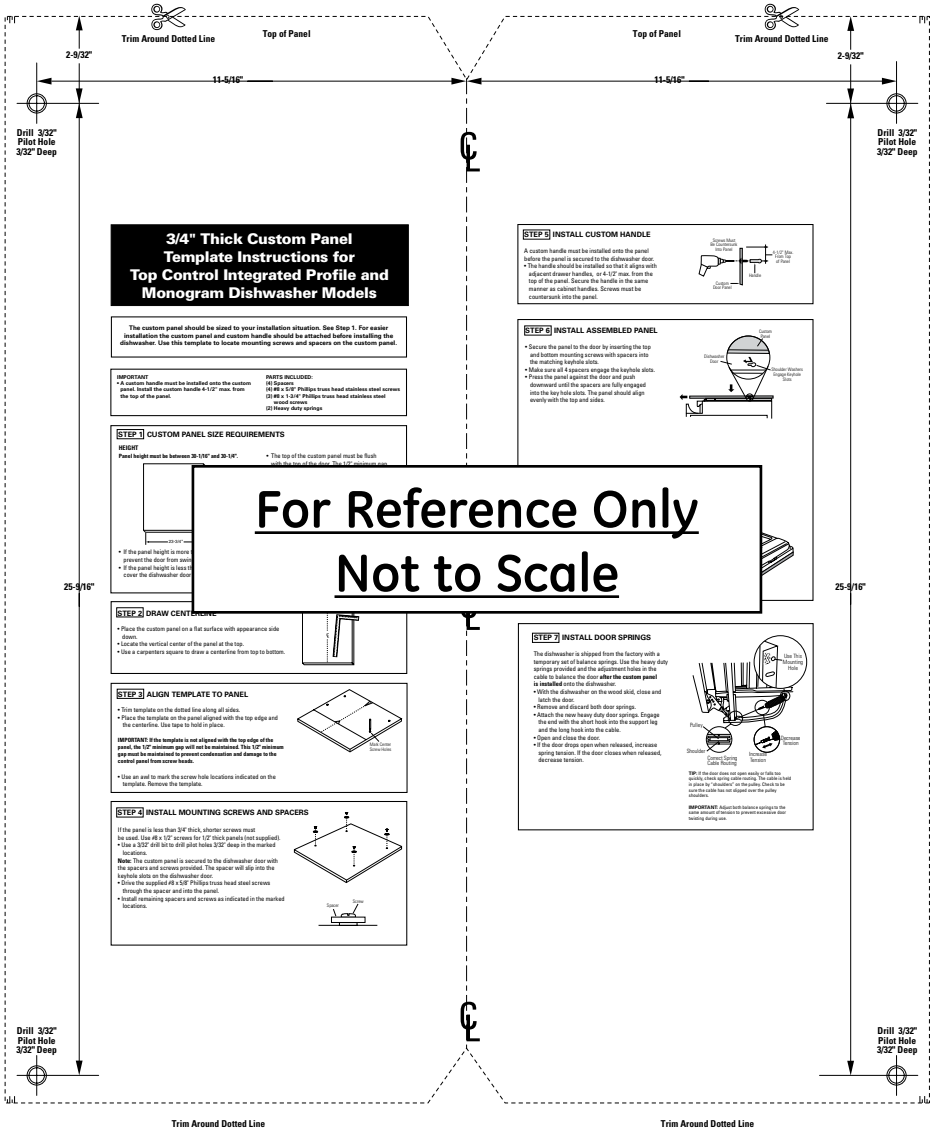

Order GE Pub. No. 31-30569-1

CALL 1-800-626-2000

For a full-size panel template with complete panel installation instructions.

imagination at work

Specification Created 10/12 150058

ZBD6920VSS/ZBD6900VII
GE Monogram® Fully Integrated Built-In Dishwashers

Features and Benefits

- Steam prewash option - Helps loosen tough soils before any cycle; Automatically runs with the selection of the Scour Wash cycle or can be selected as an option before any cycle
- Quiet operation - Is made possible by advanced sound-absorbing materials and a smooth-running motor
- ENERGY STAR® qualification - As an ENERGY STAR® partner, GE has determined that all Monogram full-size dishwashers meet the ENERGY STAR® guidelines for energy efficiency and water conservation (CEE Tier II certified)
- Large sized interior - Provides the space and loading flexibility necessary to accommodate 16 place settings
- Stainless steel tub - Retains its attractive shine cycle after cycle, year after year
- Charcoal color, ball-tipped racks - Complement the stainless steel interior
- Extraclean turbidity sensor - Continually monitors the amount of soil on dishes and makes the necessary wash-cycle adjustments for an exceptional clean
- Powerful, forced-air drying system - Continually extracts moist air from the tub, leaving dishes thoroughly dry and ready to use
- Three spray arms - Provide complete cleaning coverage, even when the dishwasher is fully loaded with plates, bowls and pots
- Antibacterial cycle - Sanitizes dishes by reducing 99.9% of bacteria with a hot-wash rinse
- Hidden, integrated electronic controls - Maintain the overall clean appearance of the exterior
- Model ZBD6920DSS – Stainless steel
- Model ZBD6900DII - Requires custom panel
- Accessory: ZPRO0700S - Professional-style stainless steel door panel kit
- Accessory: ZTB700 - Stainless steel tubular handle kit

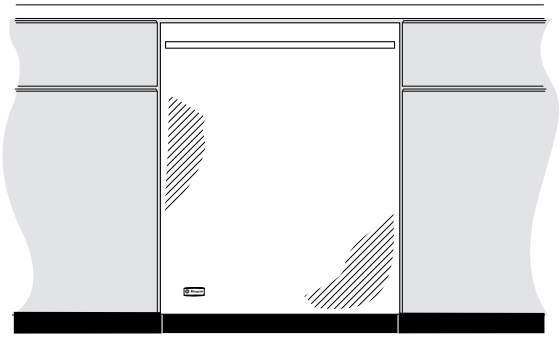

ZBD6920DSS

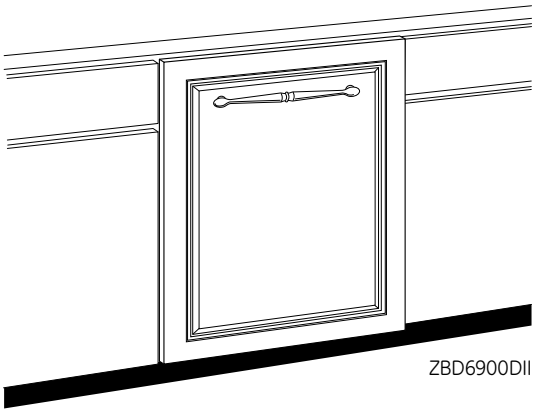

ZBD6900DII

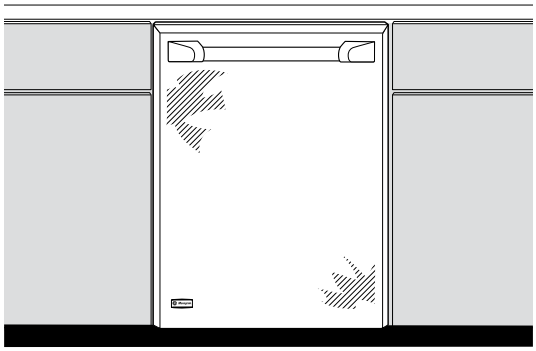

ZPRO0700S pro panel kit

imagination at work

Specification Created 10/12 150058