PGP976DET

GE Profile™ Series 36" Built-In Gas Cooktop

Dimensions and Installation Information

AGA Requirement: All gas cooktop models require 7/16" free area below cooktop height to combustible material. Requires 18" minimum from countertop to adjacent overhead cabinets.

Note: If installing with a GE Profile™ Telescopic Downdraft System, consult both cooktop and downdraft installation instructions packed with product before installing. Cooktop gas/electric supply may need to be re-routed to install downdraft.

Electrical Rating: 120V, 60Hz, 5A

Installation With Single Wall Oven Information: 30" Gas Cooktops are approved for use over select GE 27" and 30" Wall Ovens and Warming Drawers. 30" and 36" Gas cooktops are approved for use over 30" Wall Ovens and Warming Drawers. Refer to cooktop and wall oven/warming drawer installation instructions packed with product for current dimensional data.

Installation Information: Before installing, consult installation instructions, packed with product, for current dimensional data.

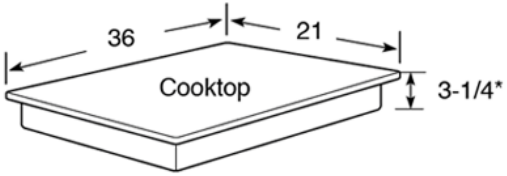

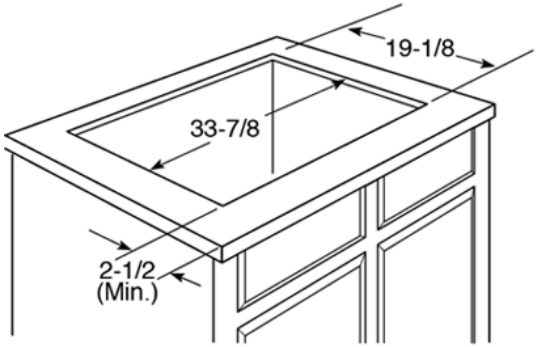

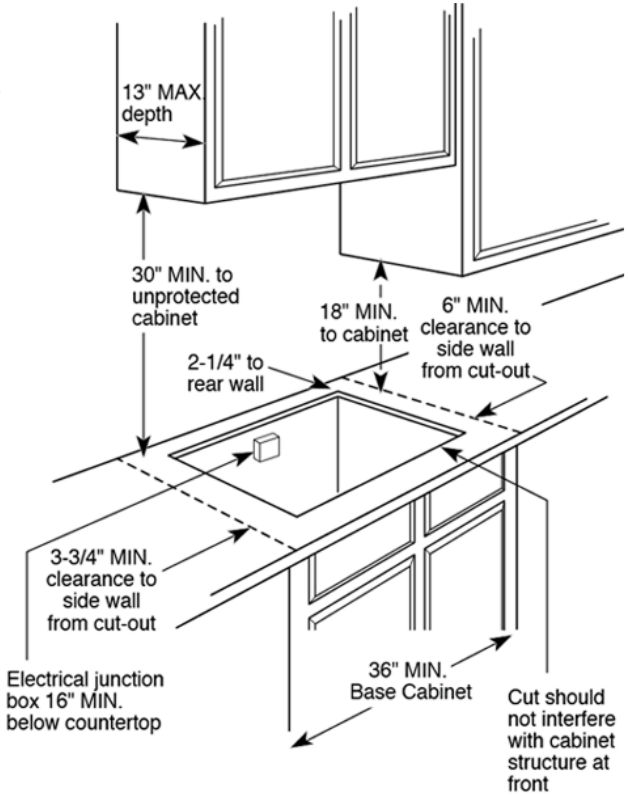

Gas Connection

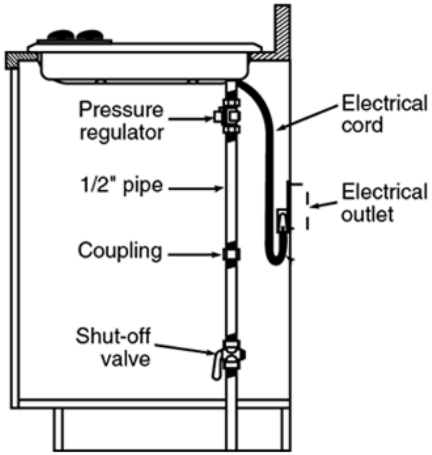

imagination at work

For answers to your Monogram® or GE® appliance questions, visit our website at geappliances.com or call GE Answer Center® service, 800.626.2000.

Specification Revised 3/13

230238

PGP976DET
GE Profile™ Series 36" Built-In Gas Cooktop

Features and Benefits

- Deep-recessed cooktop - Deep-recessed cooktop contains spills in one area that's easy to wipe clean
- Sealed cooktop burners - Burner elements are sealed to the cooktop to keep foods and liquid contained on the cooktop, making cleaning painless
- Power Boil 17K burner - This powerful element instantly supplies the intense heat needed for boiling, sautéing and stir frying
- Precise Simmer burner - Allows for low, even heat distribution that is ideal delicate foods and sauces
- Matte Black Heavy-Cast Grates - Premium cast-iron offers superior performance
- LED backlit knobs - Sleek LED backlit knobs indicate when burners are on
- Dishwasher-Safe Grates and Knobs - Feature durable construction for worry-free, effortless cleaning and maintenance
- Model PGP976DETWW - White on white
- Model PGP976DETBB - Black on black

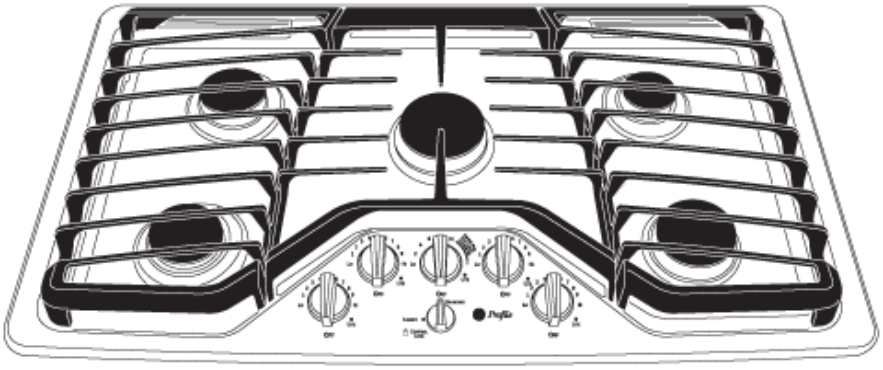

imagination at work

Specification Revised 3/13
230238